SENSITIVITY
150 Seconds for each .1 inch displacement of the bubble.
(75 seconds per division (.050”))
Sensitivity Tolerance: ± 30 Seconds

SYMBOL	REVISION RECORD	DATE	AUTH.
A	Added Hole Location	10/28/1987	V.J.C.
B	Redrawn and Revised Notes	3/19/2007	D.B.O.

NOTES:

(1) All dimensions are in inches
(2) Fluid Color: Clear
(3) Graduations: Red Baked Ceramic

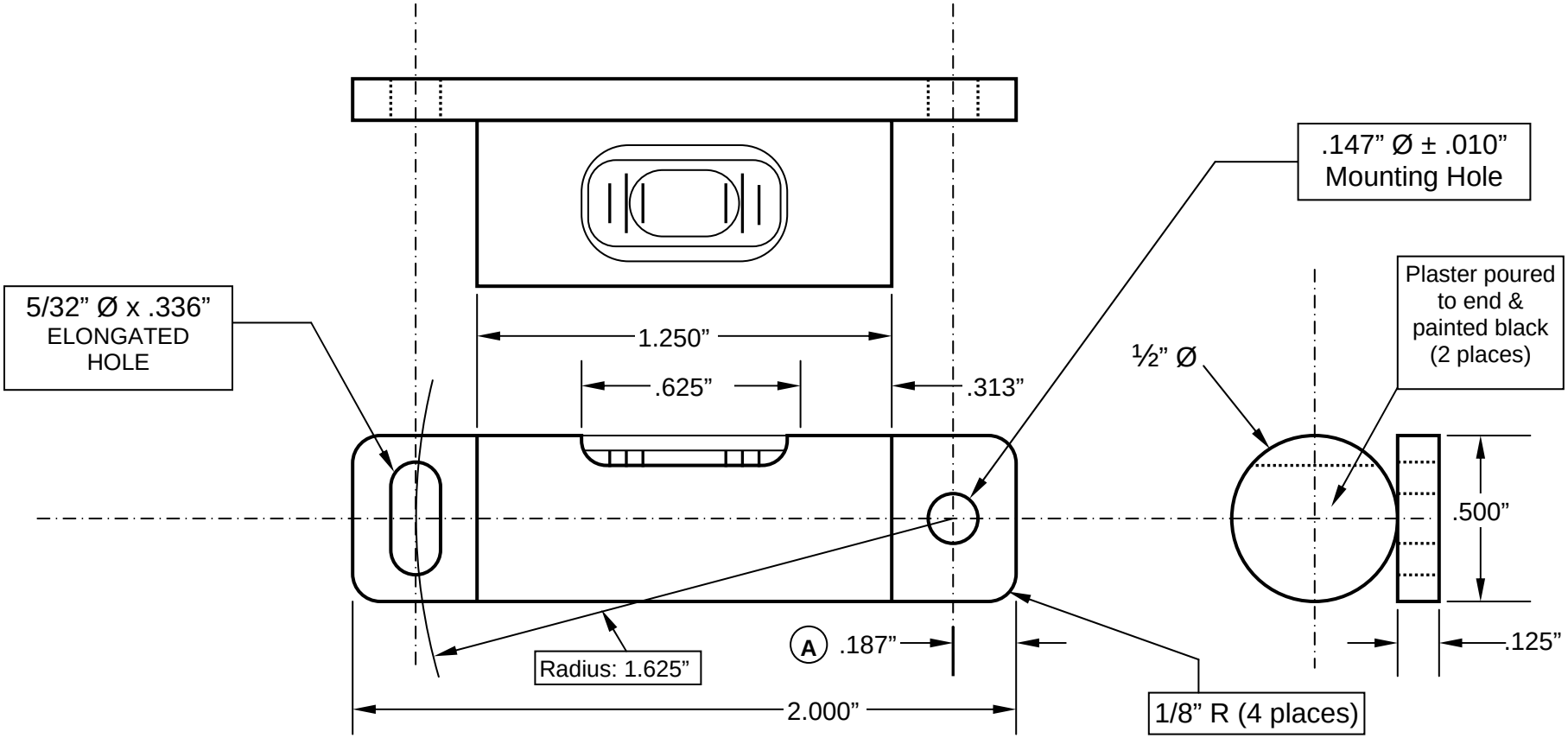

GEIER & BLUHM, INC.
594 River Street
Troy, New York 12180
U.S.A.
TEL: 518-272-6951
FAX: 518-272-0533

TOLERANCES:
(Except as noted)
Decimal: XXX +/- .010”
XX +/- .02”
Angular : +/- 1/2 degree

MATERIAL:
Housing: Brass
Vial: Glass

Protective Finish on Housing:
Black Lacquer Paint

SCALE: NONE

TUBULAR LEVEL
for Vertical Surface Mounting

DATE: August 27, 1982
DRAWN BY: DAVID OSTER

DRAWING NUMBER
4-2008